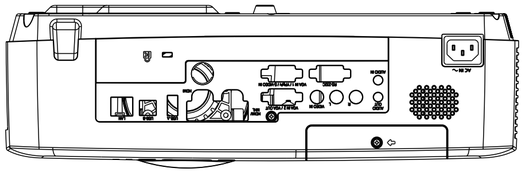

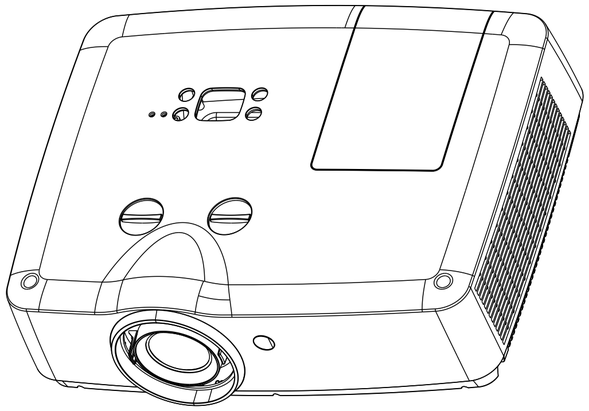

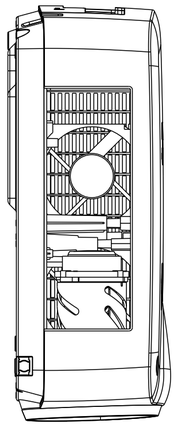

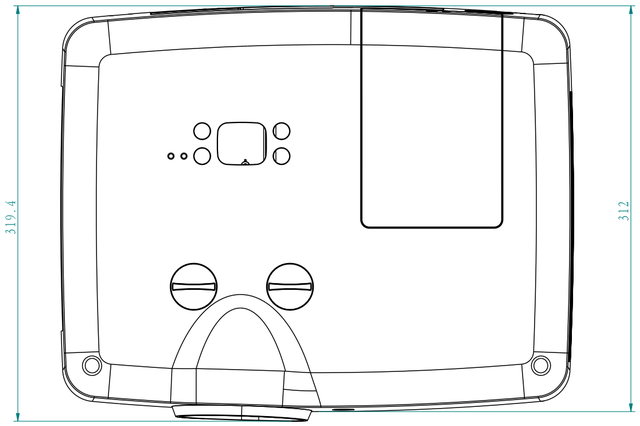
319.4
312

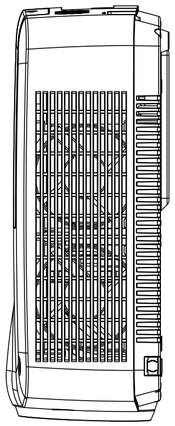

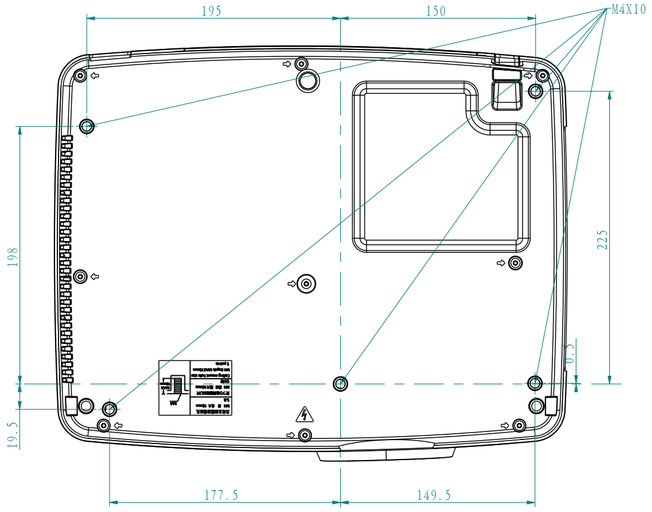
195
150
M4X10
198
225
19.5
0.5
177.5
149.5

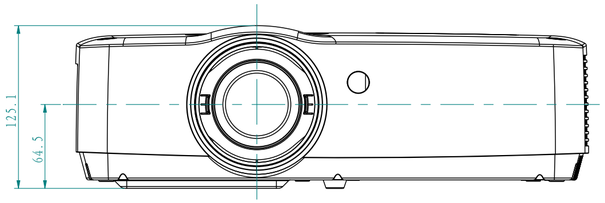
125.1
64.5